Display surface

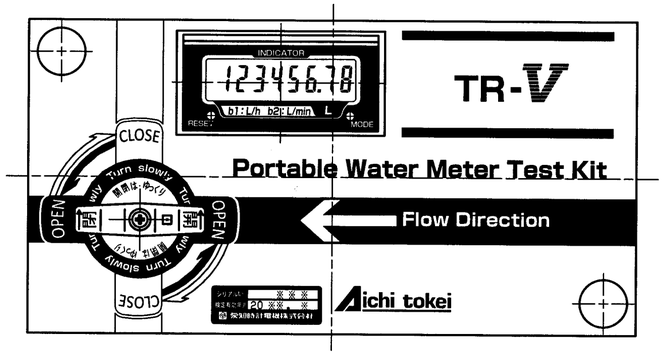

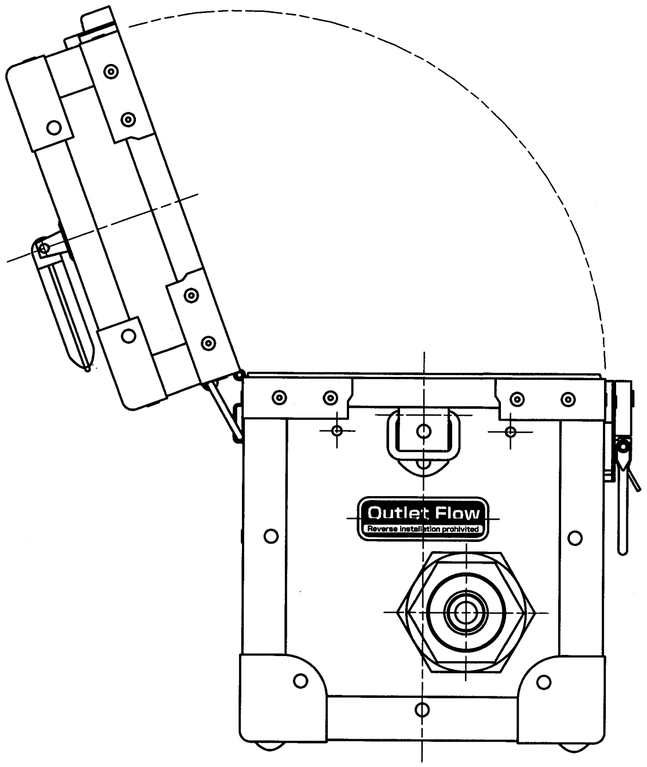

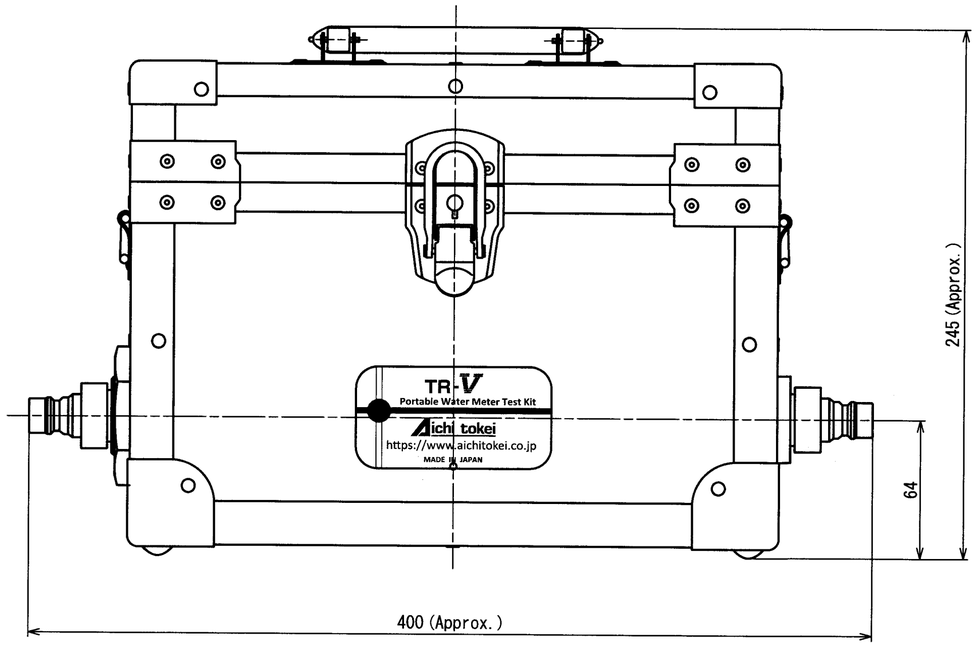

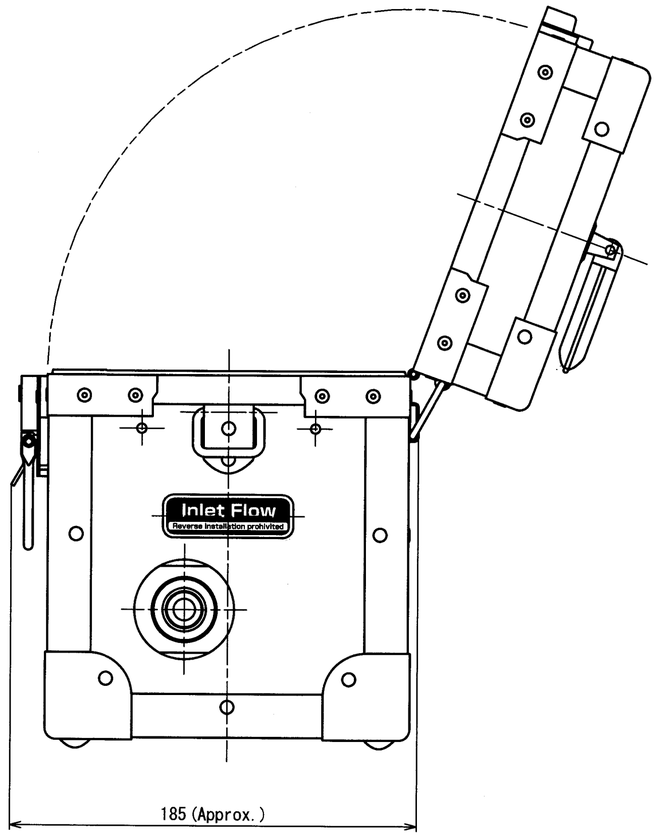

No	D1	D2	C
1			
2			
3			
4			
5			
6			
7			
8			
9			
10			
11			
12			
13			
14			
15			
S			

TOLERANCE ADS C4-01-	SCALE 1:2	MATERIAL	
PROJECTION		TREATMENT	
APPROVED	CHECKED	DRAWN	DATE
A.Takauchi	Y.Sugiura	A.Matsuda	2025/03/26

REV.	PLACE	REVISION RECODE	DATE	SIGN.	MODEL	QTY.

NAME	DRAWING NUMBER
Dimensions	TR-V

Aichi tokei denki co., ltd.